CONTROL No: 3

REV	DATE	ECO	DESCRIPTION	BY	CK	APP
-	27AUG97	N/A	INITIAL RELEASE	PRR	N/A	N/A

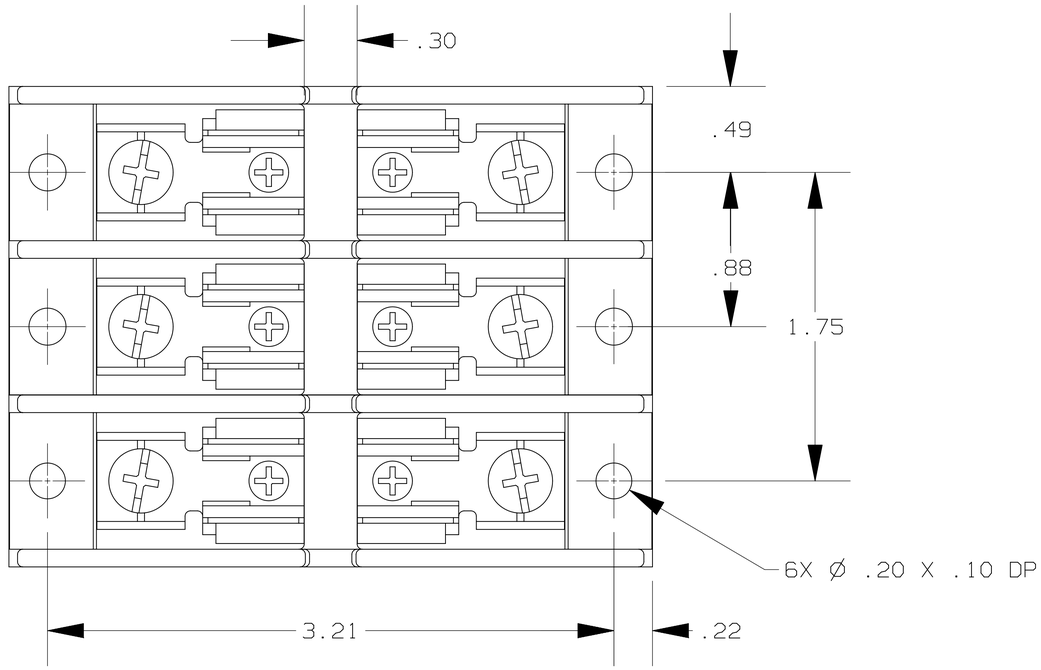

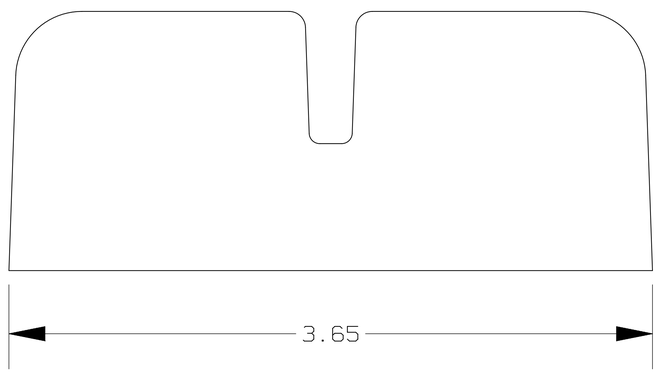

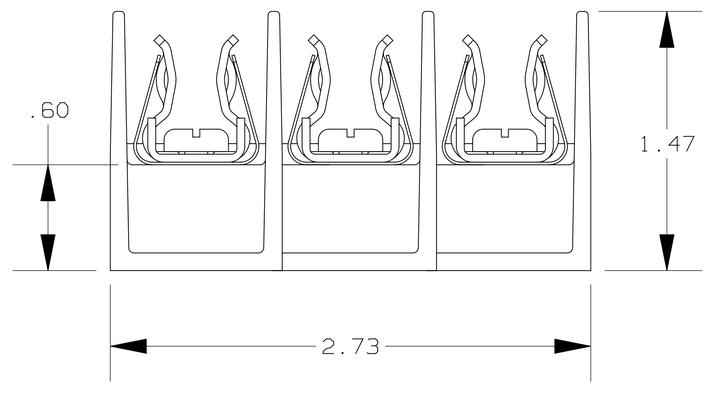

P/N	CONN TYPE	RMS SYM RATING	TORQUE (IN-LBS)	WIRE		U/L		CSA
				°C	TYPE	FILE NO.	GUIDE NO.	REPORT NO.
30318T	SCREW	200K	20	60/75	CU ONLY	E52283	IZLT	LR32169

NOTES:

1. TOLERANCES ±.015 UNLESS OTHERWISE SPECIFIED.
2. MATERIAL COMPOSITION AND RATING THERMOPLASTIC - 125°C RTI.

MERSEN 374 MERRIMAC STREET NEWBURYPORT, MA 01950

PRODUCT MANAGER
SIGN:
DATE:

DESIGN ENGINEER
SIGN:
DATE:

FUSE BLOCK, 300V-30A, 3 POLE
CLASS T

OUTLINE DIMENSIONS
NOT TO BE USED FOR PRODUCTION

700191