MERSEN

MERSEN USA NEWBURYPORT-MA, LLC
374 MERRIMAC STREET
NEWBURYPORT,MA 01950

TITLE OUTLINE

3 2B608004

CONT ON SH SH

FIRST MADE FOR CPO 9F60 EJ-1; D & DD FUSES

MODEL NO 9F60***	SIZE	FIG	CLIP Spacing	MAX KV	"A"	"B"	"C"	"D"	"E"	"F"	TYPE
ECB	D	101	7.00	2.75	10.88	3.00	2.85	3.25	2.75	3.12	EJ-1
GCB	DD	102	7.00	2.75	10.88	3.00	2.85	3.25	2.75	3.12	EJ-1

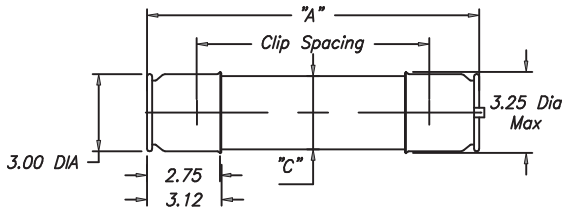

FIG 101 With Indicator

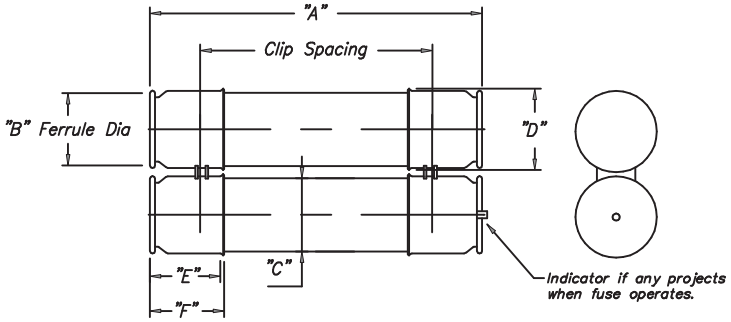

FIG 102

NOTE: DIMENSIONS FOR REFERENCE ONLY

REVISIONS			
04	K. Carroll 21-April-00	Updated Routing, Old file's on Note 1,yr. Removed unauthorized models	
05	T. Grant 8/29/01	Revised list per ECN #K150 Added: Parametric dim. & ref's. and NOTE	

CPO-V
CPO-WEB
PRINTS TO

MADE BY: M. Martin 07-July-70
ISSUED BY: K. Carroll 21-April-00

APPROVALS
Kris Ranjan 8/31/01

3 2B608004
CONT ON SH SH